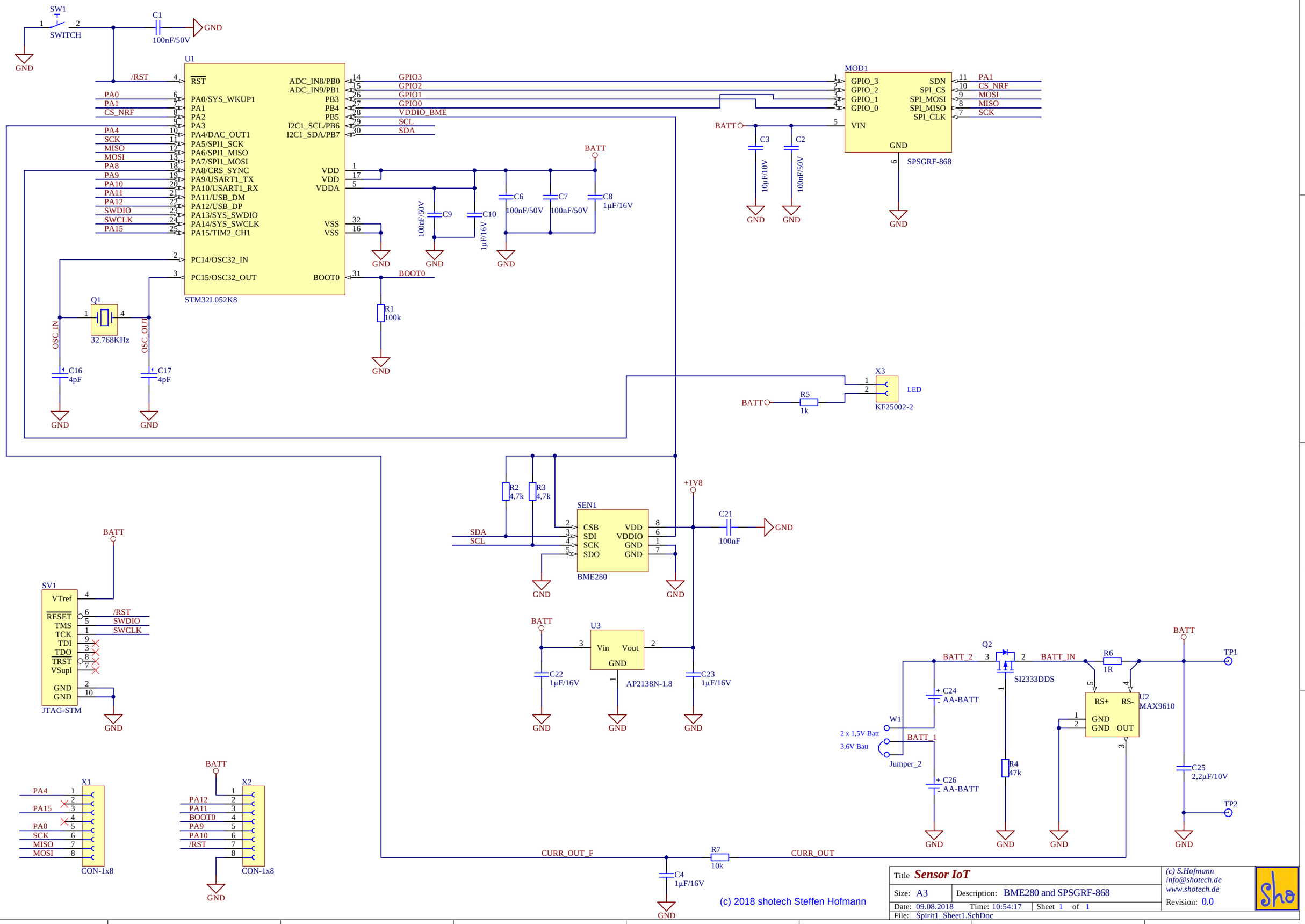
SW1
SWITCH
C1
100nF/50V
GND
U1
STM32L052K8
/RST
PA0
PA1
CS_NRF
PA4
SCK
MISO
MOSI
PA8
PA9
PA10
PA11
PA12
SWDIO
SWCLK
PA15
PA0/SYS_WKUP1
PA1
PA2
PA3
PA4/DAC_OUT1
PA5/SPI1_SCK
PA6/SPI1_MISO
PA7/SPI1_MOSI
PA8/CRS_SYNC
PA9/USART1_TX
PA10/USART1_RX
PA11/USB_DM
PA12/USB_DP
PA13/SYS_SWDIO
PA14/SYS_SWCLK
PA15/TIM2_CH1
PC14/OSC32_IN
PC15/OSC32_OUT
ADC_IN8/PB0
ADC_IN9/PB1
PB3
PB4
PB5
I2C1_SCL/PB6
I2C1_SDA/PB7
VDD
VDDA
VSS
BOOT0
GPIO3
GPIO2
GPIO1
GPIO0
VDDIO_BME
SCL
SDA
BATT
C9
100nF/50V
C10
1µF/16V
C6
100nF/50V
C7
100nF/50V
C8
1µF/16V
R1
100k
Q1
32.768KHz
OSC_IN
OSC_OUT
C16
4pF
C17
4pF
MOD1
SPSGRF-868
GPIO_3
GPIO_2
GPIO_1
GPIO_0
VIN
SDN
SPI_CS
SPI_MOSI
SPI_MISO
SPI_CLK
C3
10µF/10V
C2
100nF/50V
X3
LED
KF25002-2
R5
1k
R2
4,7k
R3
4,7k
SEN1
BME280
CSB
SDI
SCK
SDO
VDD
VDDIO
+1V8
C21
100nF
SV1
JTAG-STM
VTref
RESET
TMS
TCK
TDI
TDO
TRST
VSupl
U3
AP2138N-1.8
Vin
Vout
C22
1µF/16V
C23
1µF/16V
Q2
SI2333DDS
BATT_2
BATT_IN
R6
1R
U2
MAX9610
RS+
RS-
OUT
TP1
TP2
W1
2 x 1,5V Batt
3,6V Batt
Jumper_2
BATT_1
C24
AA-BATT
C26
AA-BATT
R4
47k
C25
2,2µF/10V
X1
CON-1x8
X2
CON-1x8
CURR_OUT_F
R7
10k
CURR_OUT
C4
1µF/16V
(c) 2018 shotech Steffen Hofmann
Title Sensor IoT
Size: A3
Description: BME280 and SPSGRF-868
Date: 09.08.2018
Time: 10:54:17
Sheet 1 of 1
File: Spirit1_Sheet1.SchDoc
(c) S.Hofmann
info@shotech.de
www.shotech.de
Revision: 0.0