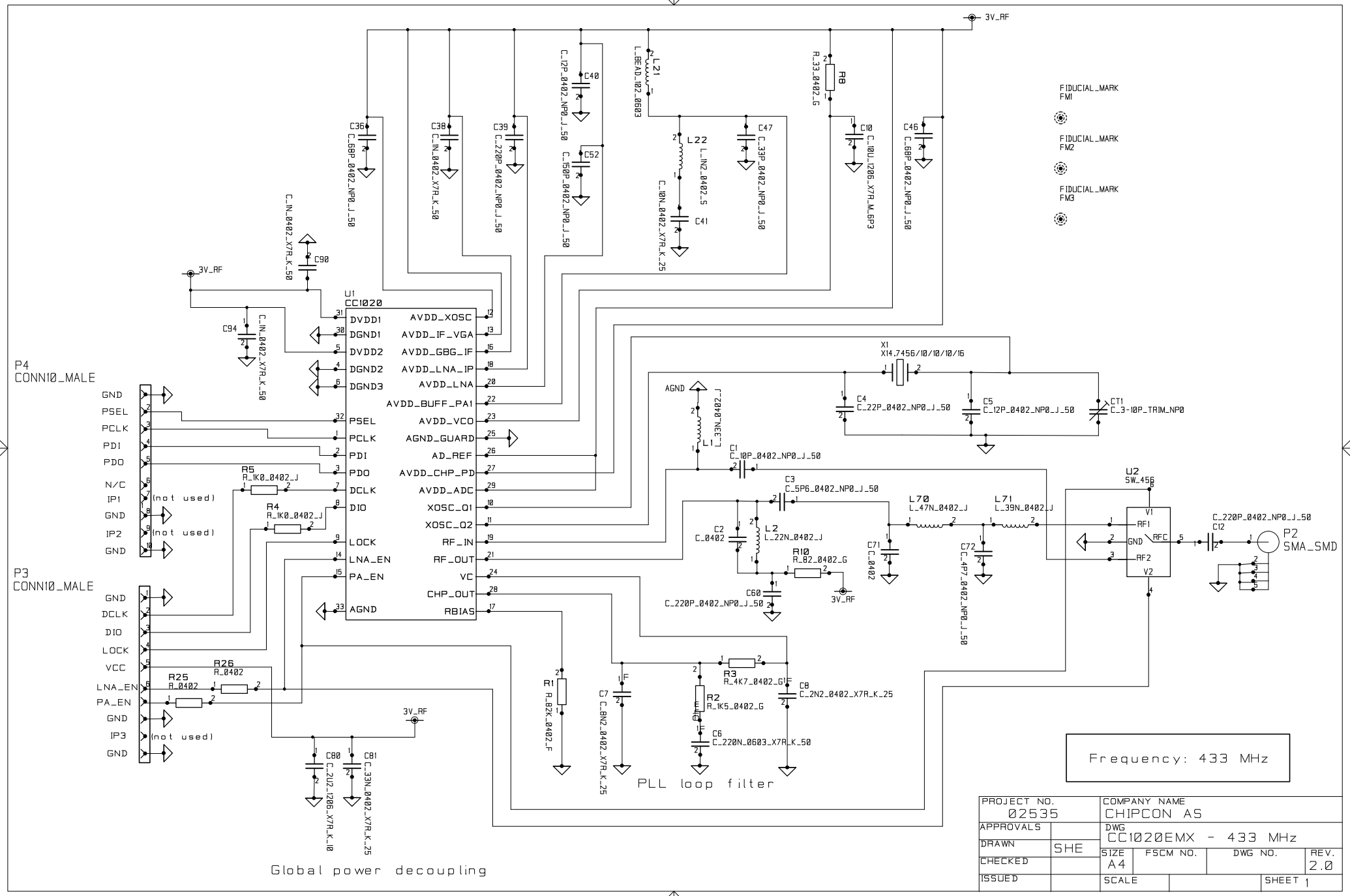
3V_RF
FIDUCIAL_MARK FM1
FIDUCIAL_MARK FM2
FIDUCIAL_MARK FM3
U1
CC1020
DVDD1
DGND1
DVDD2
DGND2
DGND3
PSEL
PCLK
PDI
PDO
DCLK
DIO
LOCK
LNA_EN
PA_EN
AGND
AVDD_XOSC
AVDD_IF_VGA
AVDD_GBG_IF
AVDD_LNA_IP
AVDD_LNA
AVDD_BUFF_PA1
AVDD_VCO
AGND_GUARD
AD_REF
AVDD_CHP_PD
AVDD_ADC
XOSC_Q1
XOSC_Q2
RF_IN
RF_OUT
VC
CHP_OUT
RBIAS
P4
CONN10_MALE
GND
PSEL
PCLK
PDI
PDO
N/C
IP1
(not used)
GND
IP2
(not used)
GND
P3
CONN10_MALE
GND
DCLK
DIO
LOCK
VCC
LNA_EN
PA_EN
GND
IP3
(not used)
GND
R5 R_1K0_0402_J
R4 R_1K0_0402_J
R26 R_0402
R25 R_0402
C36 C_68P_0402_NP0_J_50
C38 C_1N_0402_X7R_K_50
C39 C_220P_0402_NP0_J_50
C40 C_12P_0402_NP0_J_50
C52 C_150P_0402_NP0_J_50
C90 C_1N_0402_X7R_K_50
C94 C_1N_0402_X7R_K_50
L21 L_BEAD_102_0603
L22 L_1N2_0402_S
C41 C_10N_0402_X7R_K_25
C47 C_33P_0402_NP0_J_50
R8 R_33_0402_G
C10 C_10U_1206_X7R_M_6P3
C46 C_68P_0402_NP0_J_50
X1 X14.7456/10/10/10/16
C4 C_22P_0402_NP0_J_50
C5 C_12P_0402_NP0_J_50
CT1 C_3-10P_TRIM_NP0
AGND
L1 L_33N_0402_J
C1 C_10P_0402_NP0_J_50
C3 C_5P6_0402_NP0_J_50
C2 C_0402
L2 L_22N_0402_J
R10 R_82_0402_G
C60 C_220P_0402_NP0_J_50
3V_RF
L70 L_47N_0402_J
L71 L_39N_0402_J
C71 C_0402
C72 C_4P7_0402_NP0_J_50
U2
SW_456
V1
RF1
GND
RF2
V2
RFC
C_220P_0402_NP0_J_50
C12
P2
SMA_SMD
R1 R_82K_0402_F
C7 C_8N2_0402_X7R_K_25
R3 R_4K7_0402_G
R2 R_1K5_0402_G
C6 C_220N_0603_X7R_K_50
C8 C_2N2_0402_X7R_K_25
PLL loop filter
3V_RF
C80 C_2U2_1206_X7R_K_10
C81 C_33N_0402_X7R_K_25
Global power decoupling
Frequency: 433 MHz
PROJECT NO. 02535
COMPANY NAME CHIPCON AS
APPROVALS
DRAWN SHE
CHECKED
ISSUED
DWG CC1020EMX - 433 MHz
SIZE A4
FSCM NO.
DWG NO.
REV. 2.0
SCALE
SHEET 1