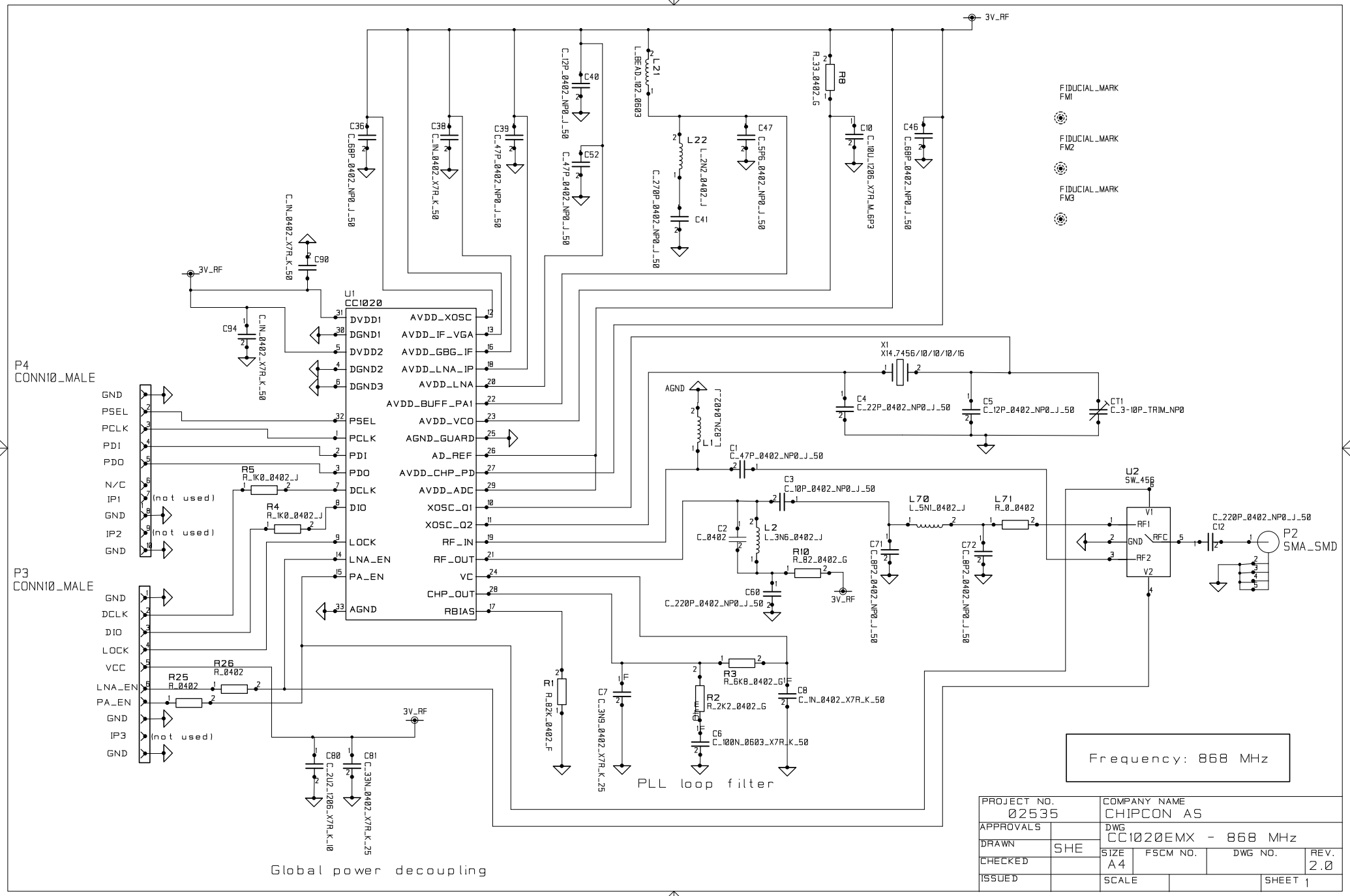
3V_RF
FIDUCIAL_MARK FM1
FIDUCIAL_MARK FM2
FIDUCIAL_MARK FM3
U1
CC1020
DVDD1
DGND1
DVDD2
DGND2
DGND3
PSEL
PCLK
PDI
PDO
DCLK
DIO
LOCK
LNA_EN
PA_EN
AGND
AVDD_XOSC
AVDD_IF_VGA
AVDD_GBG_IF
AVDD_LNA_IP
AVDD_LNA
AVDD_BUFF_PA1
AVDD_VCO
AGND_GUARD
AD_REF
AVDD_CHP_PD
AVDD_ADC
XOSC_Q1
XOSC_Q2
RF_IN
RF_OUT
VC
CHP_OUT
RBIAS
P4
CONN10_MALE
GND
PSEL
PCLK
PDI
PDO
N/C
IP1
(not used)
GND
IP2
(not used)
GND
P3
CONN10_MALE
GND
DCLK
DIO
LOCK
VCC
LNA_EN
PA_EN
GND
IP3
(not used)
GND
X1
X14.7456/10/10/10/16
C4
C_22P_0402_NP0_J_50
C5
C_12P_0402_NP0_J_50
CT1
C_3-10P_TRIM_NP0
U2
SW_456
V1
RF1
GND
RFC
RF2
V2
P2
SMA_SMD
C_220P_0402_NP0_J_50
C12
L70
L_5N1_0402_J
L71
R_0_0402
C71
C_8P2_0402_NP0_J_50
C72
C_8P2_0402_NP0_J_50
L1
L_82N_0402_J
C1
C_47P_0402_NP0_J_50
C3
C_10P_0402_NP0_J_50
C2
C_0402
L2
L_3N6_0402_J
R10
R_82_0402_G
C60
C_220P_0402_NP0_J_50
R5
R_1K0_0402_J
R4
R_1K0_0402_J
R26
R_0402
R25
R_0402
R1
R_82K_0402_F
C7
C_3N9_0402_X7R_K_25
R3
R_6K8_0402_G
R2
R_2K2_0402_G
C8
C_1N_0402_X7R_K_50
C6
C_100N_0603_X7R_K_50
PLL loop filter
C80
C_2U2_1206_X7R_K_10
C81
C_33N_0402_X7R_K_25
Global power decoupling
C36
C_68P_0402_NP0_J_50
C38
C_1N_0402_X7R_K_50
C39
C_47P_0402_NP0_J_50
C40
C_12P_0402_NP0_J_50
C52
C_47P_0402_NP0_J_50
L21
L_BEAD_102_0603
L22
L_2N2_0402_J
C41
C_270P_0402_NP0_J_50
C47
C_5P6_0402_NP0_J_50
R8
R_33_0402_G
C10
C_10U_1206_X7R_M_6P3
C46
C_68P_0402_NP0_J_50
C_1N_0402_X7R_K_50
C90
C94
C_1N_0402_X7R_K_50
Frequency: 868 MHz
PROJECT NO.
02535
COMPANY NAME
CHIPCON AS
APPROVALS
DRAWN
SHE
CHECKED
ISSUED
DWG
CC1020EMX - 868 MHz
SIZE
A4
FSCM NO.
DWG NO.
REV.
2.0
SCALE
SHEET 1