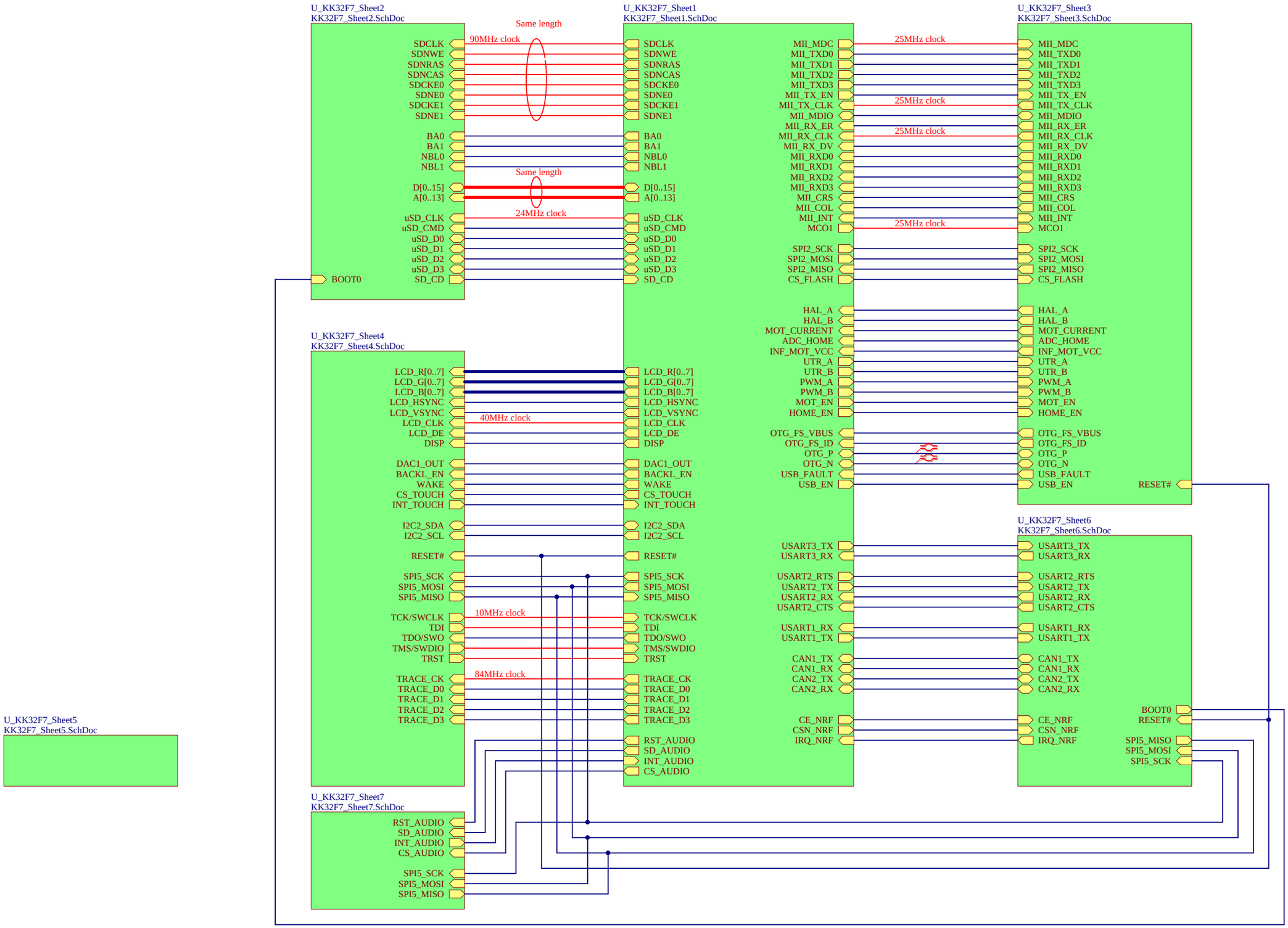

Z1 Passermarke

Z2 Passermarke

LG1 1 2 3 4 5 6
Lagenanzeige6

Title **Testboard KK32F7 V1.0**		*(c) S.Hofmann* *info@shotech.de* *www.shotech.de*
Size: A3	Description: Overview KK32F7	Revision: 0.0
Date: 03.08.2018	Time: 07:36:22	Sheet 0 of 8
File: KK32F7_Sheet0.SchDoc		

Title	*Testboard KK32F7 V1.0*		*(c) S.Hofmann* *info@shotech.de* *www.shotech.de*
Size: A3	Description: STM32F7 wiring		Revision: 0.0
Date: 03.08.2018	Time: 07:36:22	Sheet 1 of 8	
File: KK32F7_Sheet1.SchDoc			

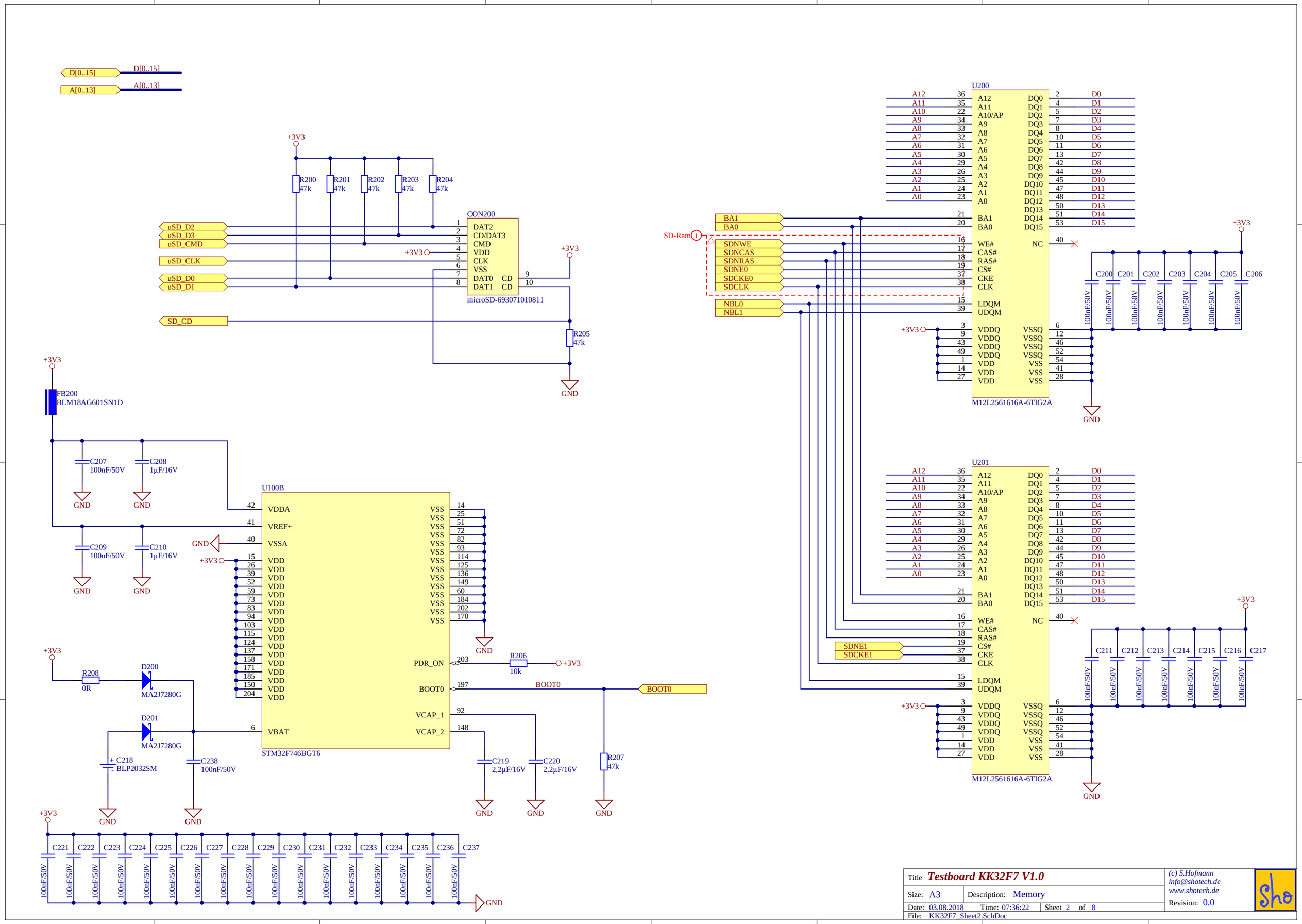

Title	*Testboard KK32F7 V1.0*
Size: A3	Description: Memory
Date: 03.08.2018	Time: 07:36:22
Sheet 2 of 8	
File: KK32F7_Sheet2.SchDoc	

(c) S.Hofmann
info@shotech.de
www.shotech.de

Revision: 0.0

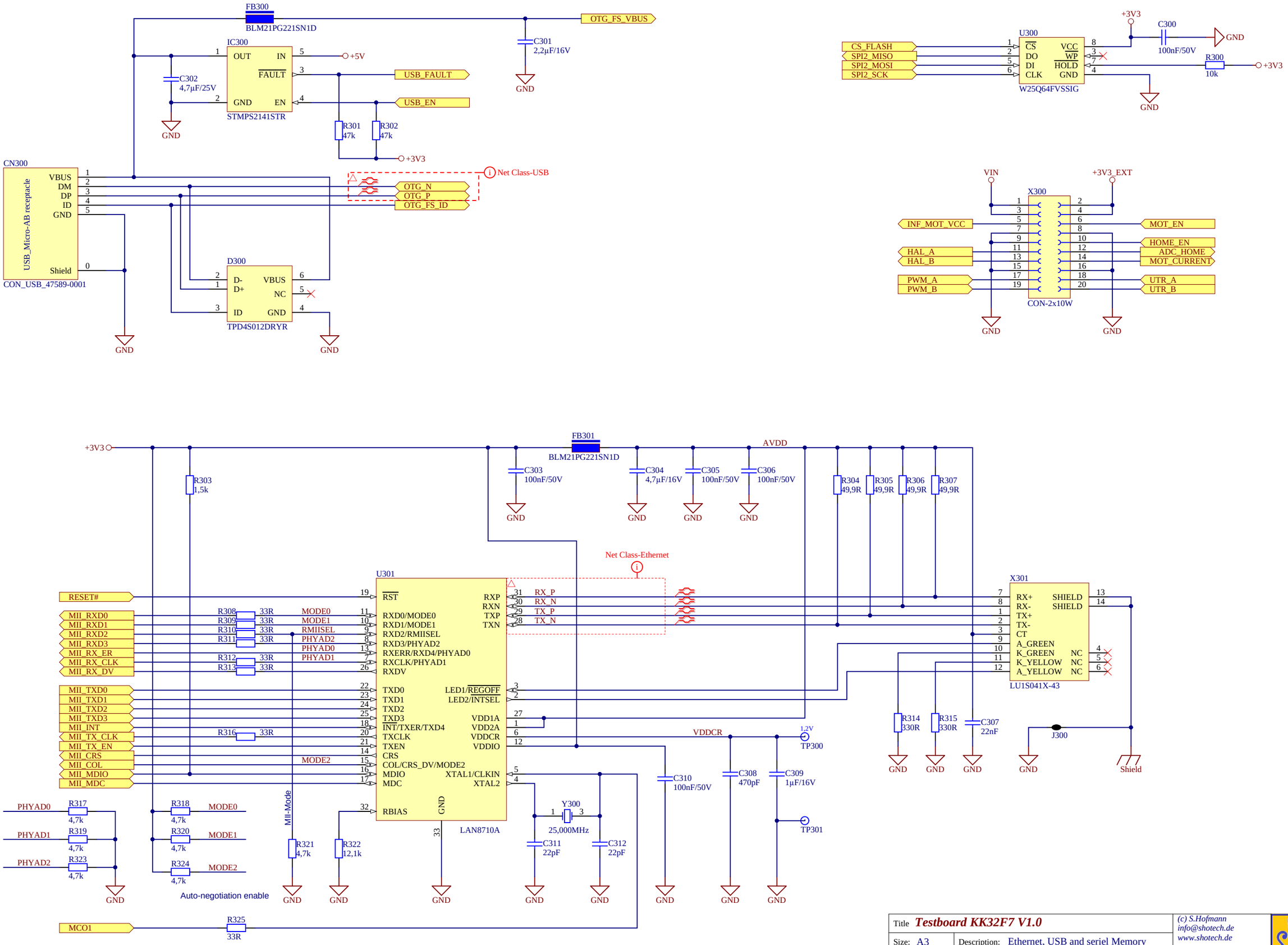

Title	*Testboard KK32F7 V1.0*
Size: A3	Description: Ethernet, USB and seriel Memory
Date: 03.08.2018	Time: 07:36:23
Sheet 3 of 8	
File: KK32F7_Sheet3.SchDoc	

(c) S.Hofmann
info@shotech.de
www.shotech.de

Revision: 0.0

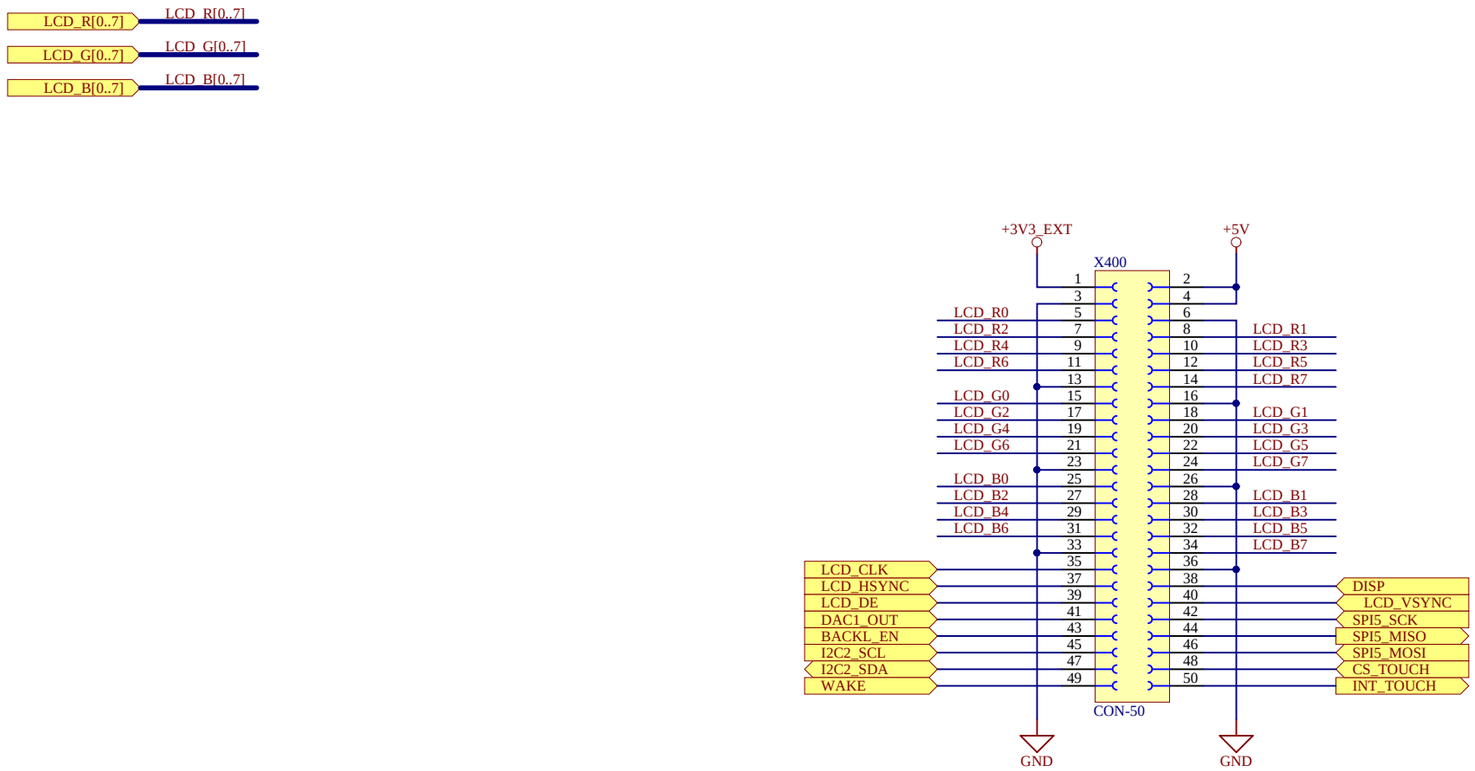

Title	*Testboard KK32F7 V1.0*	*(c) S.Hofmann* *info@shotech.de* *www.shotech.de*
Size: A3	Description: Display Connector an Trace-Port	Revision: 0.0
Date: 03.08.2018	Time: 07:36:23	Sheet 4 of 8
File: KK32F7_Sheet4.SchDoc		

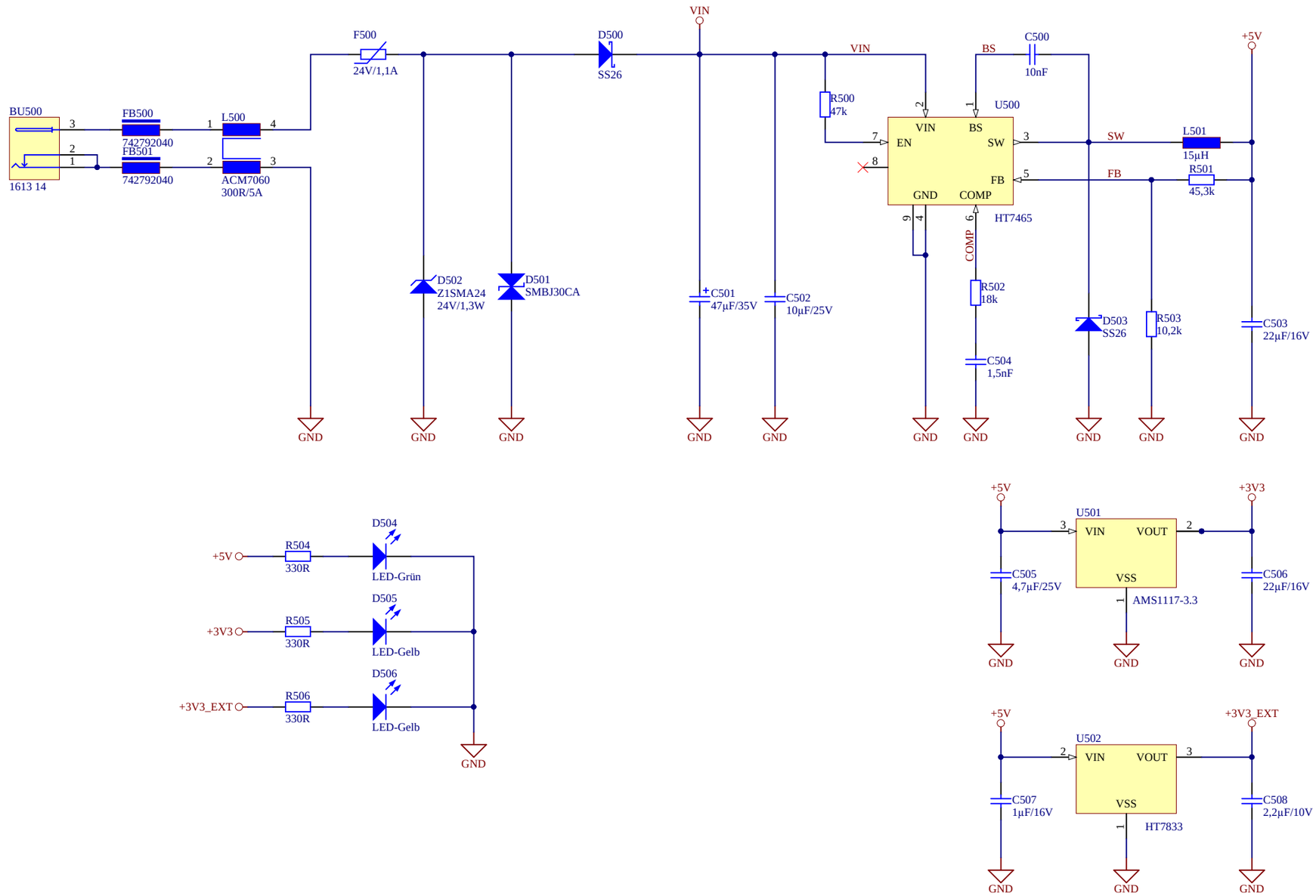

Title	*Testboard KK32F7 V1.0*		*(c) S.Hofmann* *info@shotech.de* *www.shotech.de*
Size: A3	Description: Power supply		Revision: 0.0
Date: 03.08.2018	Time: 07:36:23	Sheet 5 of 8	
File: KK32F7_Sheet5.SchDoc			

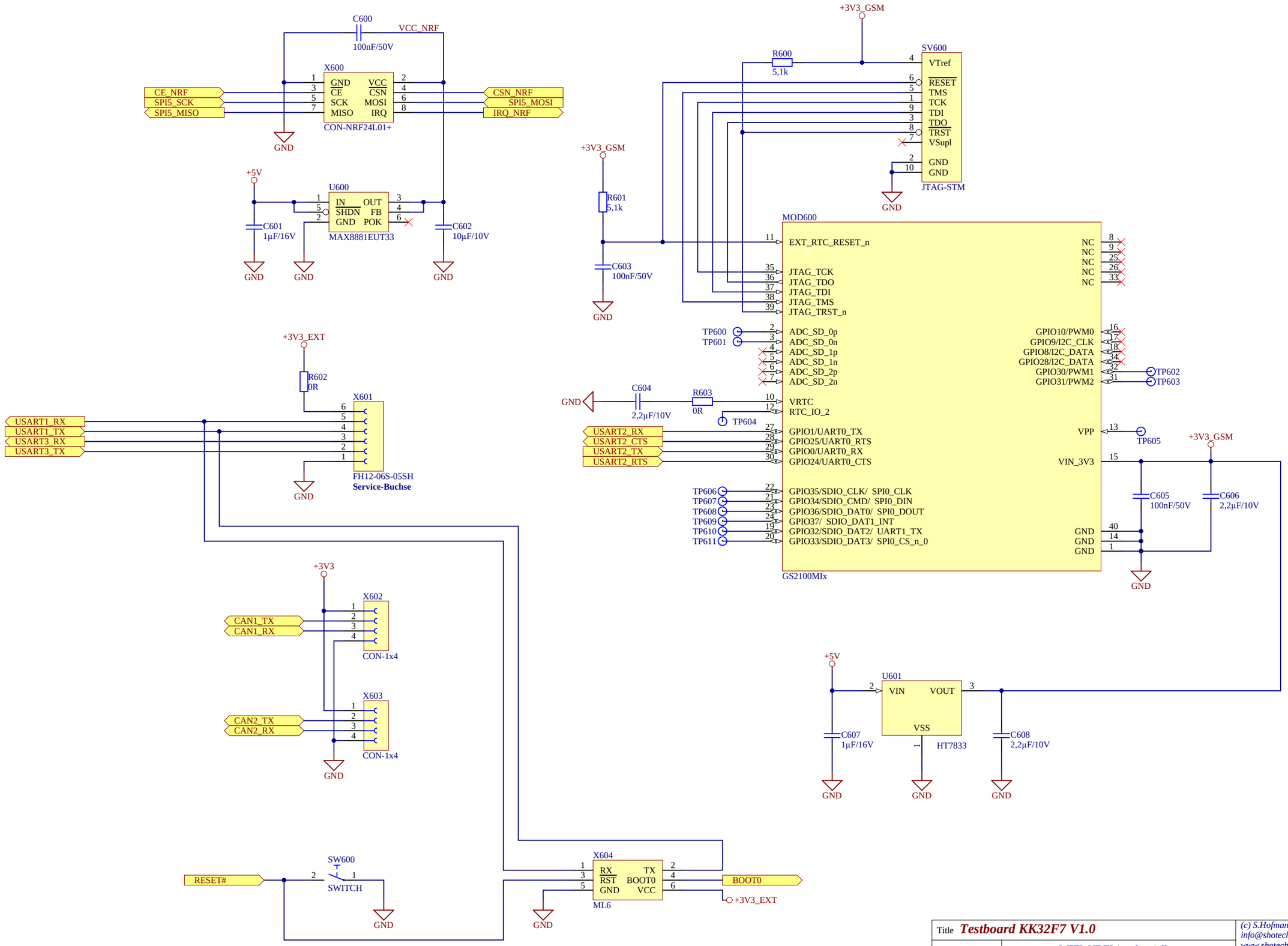

Title **Testboard KK32F7 V1.0**		(c) S.Hofmann info@shotech.de www.shotech.de
Size: A3	Description: WIFI, NRF24 and seriell	Revision: 0.0
Date: 03.08.2018 Time: 07:36:23	Sheet 6 of 8	
File: KK32F7_Sheet6.SchDoc		

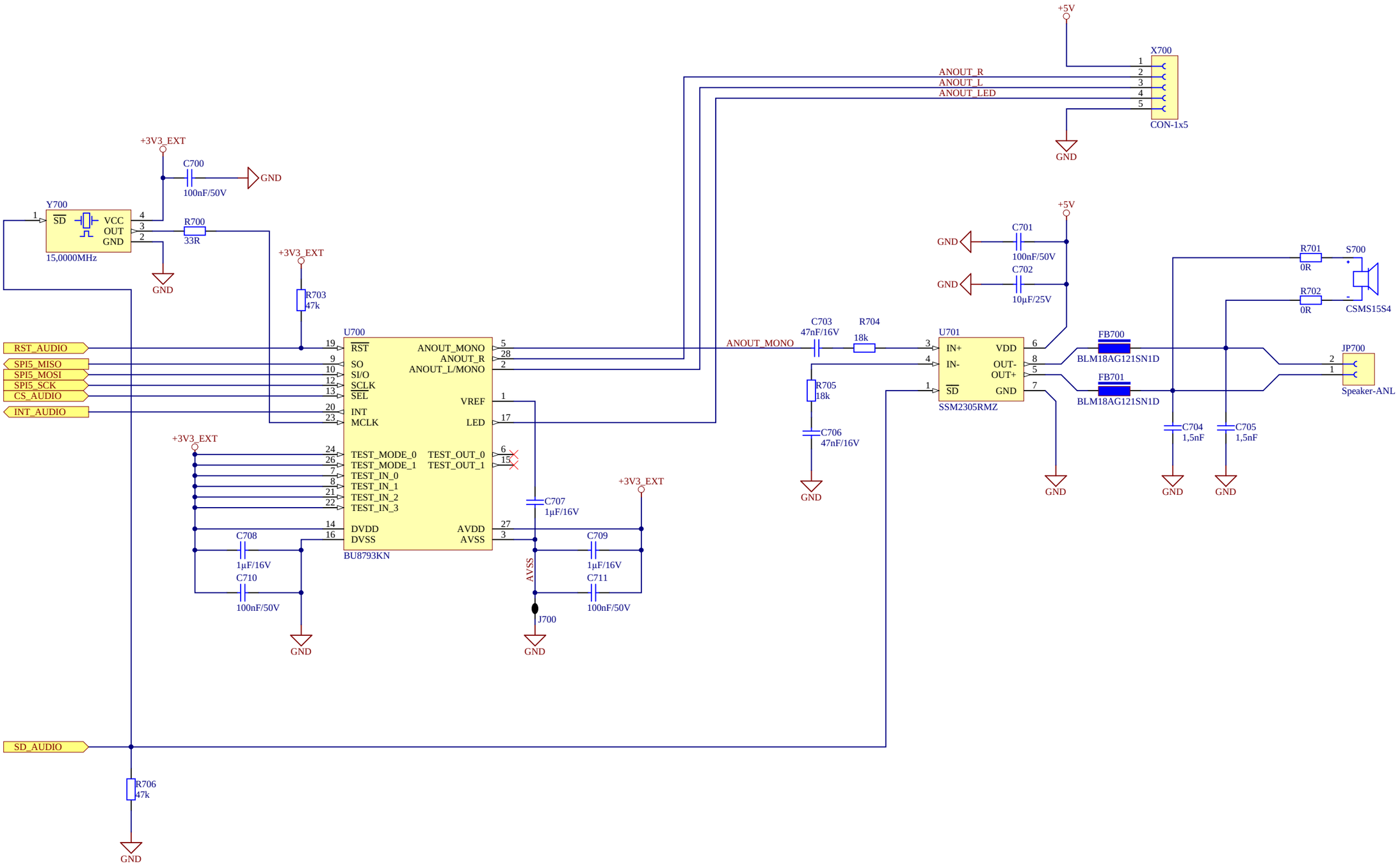

Title *Testboard KK32F7 V1.0*		*(c) S.Hofmann* *info@shotech.de* *www.shotech.de*
Size: A3	Description: Soundmodul	Revision: 0.0
Date: 03.08.2018	Time: 07:36:23	Sheet 7 of 8
File: KK32F7_Sheet7.SchDoc		

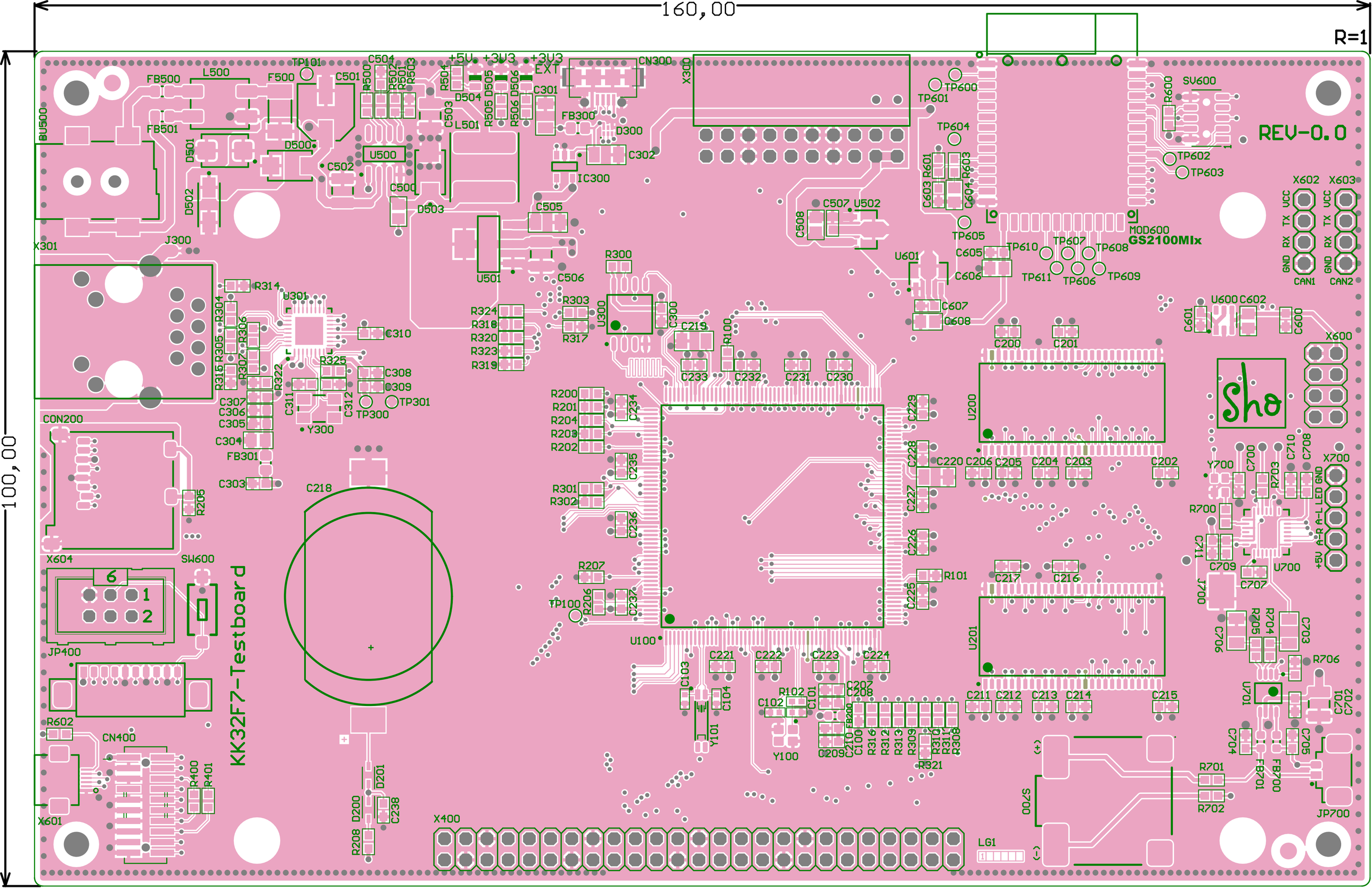
160,00
100,00
R=1
REV-0.0
KK32F7-Testboard
GS2100MIx
MOD600
CN300
X300
CN400
CON200
X301
J300
X400
X600
X602
X603
X604
X700
X601
JP400
JP700
SW600
SV600
U100
U200
U201
U300
U301
U500
U501
U600
U700
U701
U502
U601
Y100
Y101
Y300
Y700
LG1
S700
CAN1
CAN2
VCC
TX
RX
GND
+5V
A-R
A-L
LED
GND