Oki, Network Solutions for a Global Society

OKI

16-64 POLYPHONY, LOUDER and HI-FI PCM SOUND GENERATOR LSI

ML2871/72/73/74/63/65

■ Features

ML2871, ML2872, ML2873, ML2874, ML2863, and ML2865 are PCM sound generator LSI in pin compatible family. There are 6 kinds of products of different polyphony and different sound quality. Since all products are pin compatible and software compatible except stereo output, it is easy to replace sound generator. ML2872 and ML2865 have high fidelity of sound quality for specially Europe and US market who prefer high fidelity sound. ML2873, ML2871 and ML2863 have loud sound for Asian market who prefer to louder sound. ML2871/73/63 have 13 kinds of Chinese traditional instruments sound. ML2874 has 46 BRICs traditional instruments sound.

The all products consist of GM sound generator, a 650mW 8ohm speaker amplifier, selectable CPU I/F from 8bit bus I/F or SPI mode 0/2 and ADPCM/PCM synthesizer for effective sound. All LSI are supported by WCSP package and QFN package. Specially, WCSP is the most compact package.

■ Block Diagram

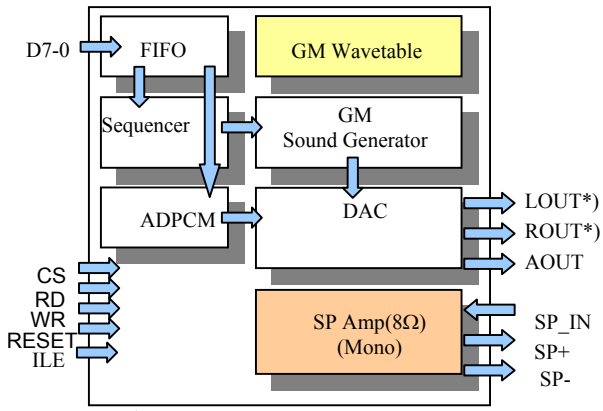

*) MB-32S and MB-16S do not have LOUT and ROUT pins

■ Specifications

Product No.	Poly	Audio Output	Package Size	Sound Quality / Features
ML2865	64	Stereo	QFN 5.2 * 6.2mm2 WCSP 3.6*4.2mm2	High Fidelity
ML2872	32	Stereo	Same as above	Same as above
ML2863	64	Stereo	QFN 5.2 * 6.2mm2 WCSP 3.6*4.2mm2	Louder Sound / Chinese Instruments
ML2874	32	Stereo	QFN 5.2 * 6.2mm2 WCSP 3.6*4.2mm2	Louder Sound / BRICs Instruments
ML2871	32	Mono	QFN 5.2 * 6.2mm2 WCSP 3.6*4.6mm2	Louder Sound / Chinese Instruments
ML2873	16	Mono	Same as above	Same as above

■ Typical Application Example

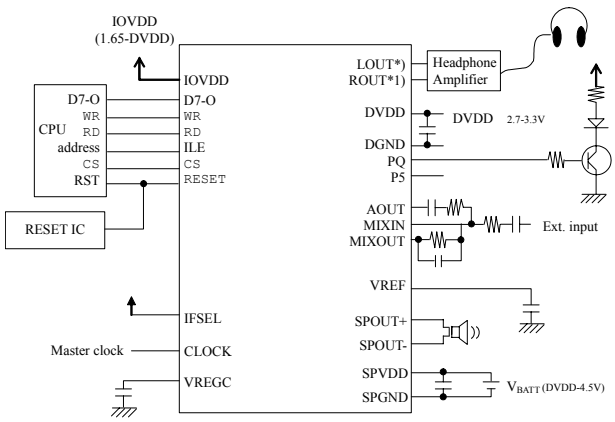

*1) Only ML2863, ML2872 and ML2865 have LOUT and ROUT pins. ML2873 and ML2871 do not have LOUT and ROUT pins.

■ Essential Features

- General MIDI 128 timbres + 47 percussion sounds
- 16-64 polyphonics with 16 timbres
- Variable Sound Quality
  - High fidelity (ML2872/65)
  - Louder Sound (ML2871/73/74/63)
  - 13 Chinese traditional instruments (ML2871/73/63)
  - 46 BRICs traditional instruments (ML2874)
- Temperament tuning function (ML2874)
- Internal 2-bit/4-bit ADPCM/PCM Synthesizer (fs 4 to 32kHz)
- Embedded FIFOs:
  - For sequencer: 1024bit
  - For real-time melody playback: 128bit
  - For ADPCM: 4096bit
- 8-bit bus interface, SPI mode 0, 2 selectable
- LED and Vibrator in Synchronous with Melody
- Melody playback synchronous with ADPCM/PCM
- Transpose / Tone change / Volume functions
- 16-bit DAC built-in
- 8ohm Speaker amplifier embedded
- Power supply: +2.7 to 3.6V
- Operating current: 45mA max (digital block).
- Standby current: 2μA typ.
- Operating temperature: -20~+85° C

Swing'nRinger™

Swing'nRinger™ is a registered trademark of Oki Electric Industry Co., Ltd.

NDA or memorandum is required due to datasheet and other details. Thank you for your understanding.

This is a product introduction, not the products' data sheet. Specification are subject to change without notice.
OKI Electric Industry Co., Ltd., Silicon Solutions Company
Japan: www.okisemi.com/jp/english/, USA: www.okisemi.com/us/, Europe: www.okisemi.com/eu/, Taiwan: www.okisemi.com/tw/,
Hong Kong: www.okisemi.com/hk/,Shanghai: www.okisemi.com/sh/, Singapore: www.okisemi.com/sg/
2006. 6. 2 FEPL2871_72_73_74_63_65-03