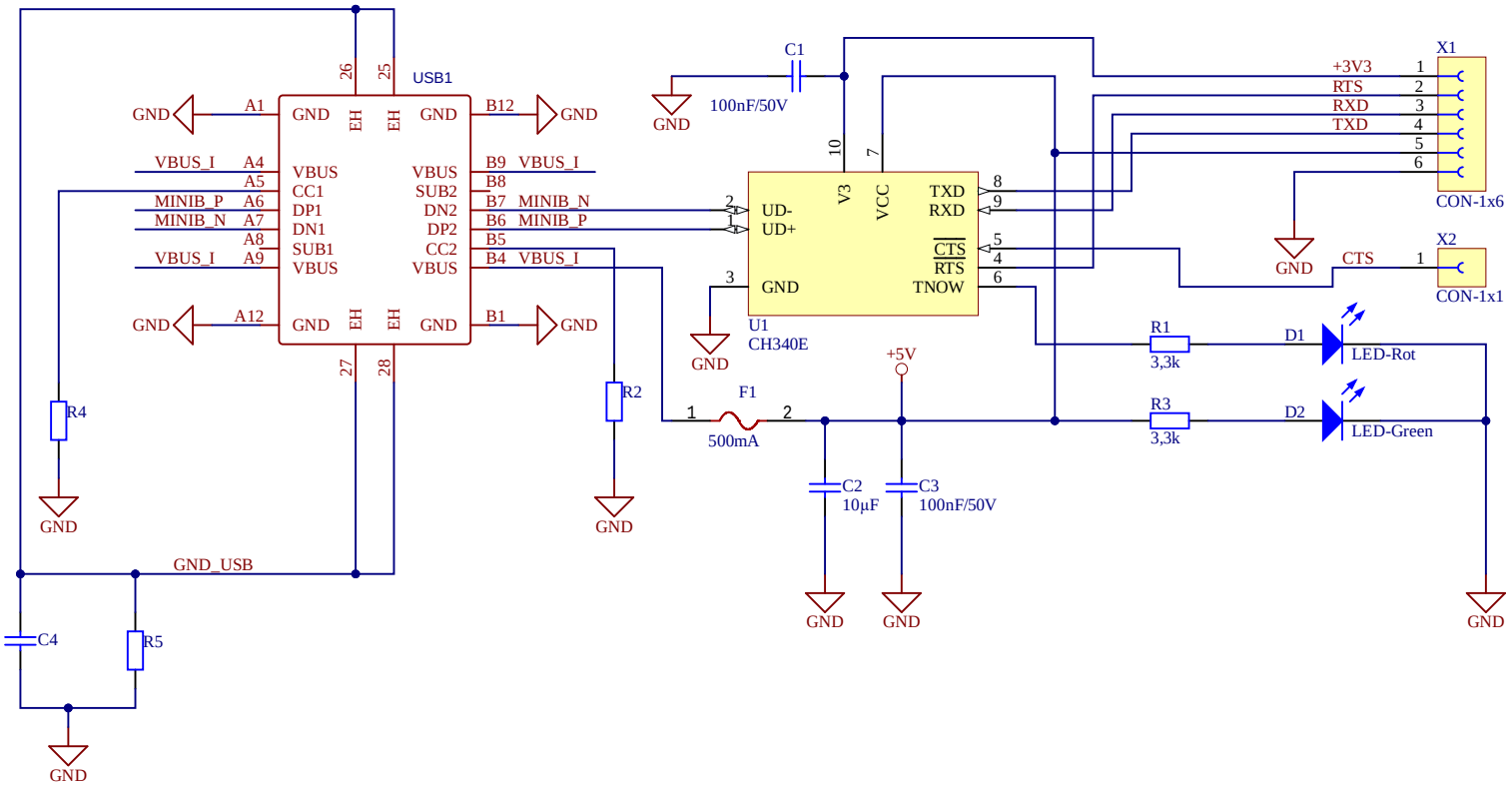

Title	**USB-C to TTL Seriell Adapter**		*S.Hofmann*
Size: A4	Description: *		*mcu@shotech.de*
Date: 21.07.2026	Time: 13:17:06	Sheet 1 of 1	*http://www.shotech.de*
File: CH340E-Board-V01.SchDoc			Revision: 0.0